ArmorPlast® Gen II
Storefront Security Systems

Simple - Discrete - Effective

ArmorPlast® Gen II

AP2-SF-STD-AP25

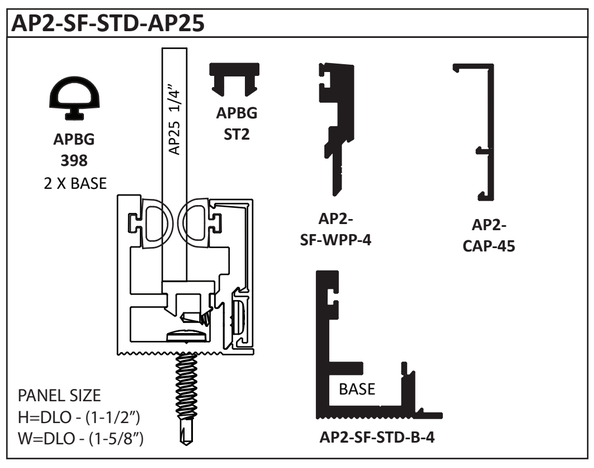

AP2-SF-STD-AP375

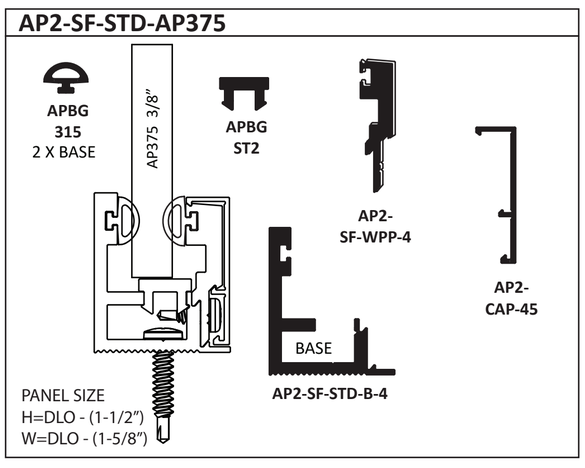

AP2-SF-MULLION WITH SHEAR BLOCK

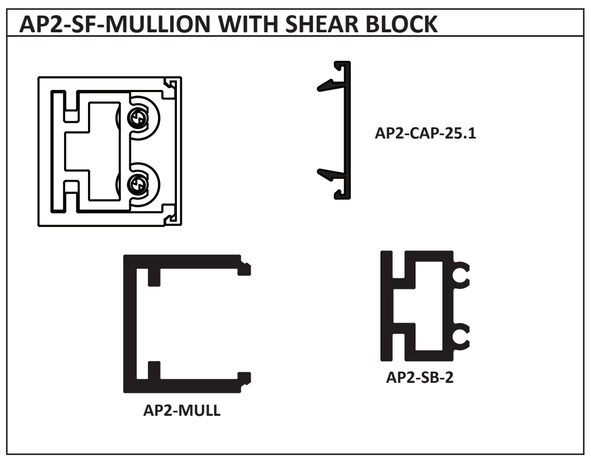

PARTS

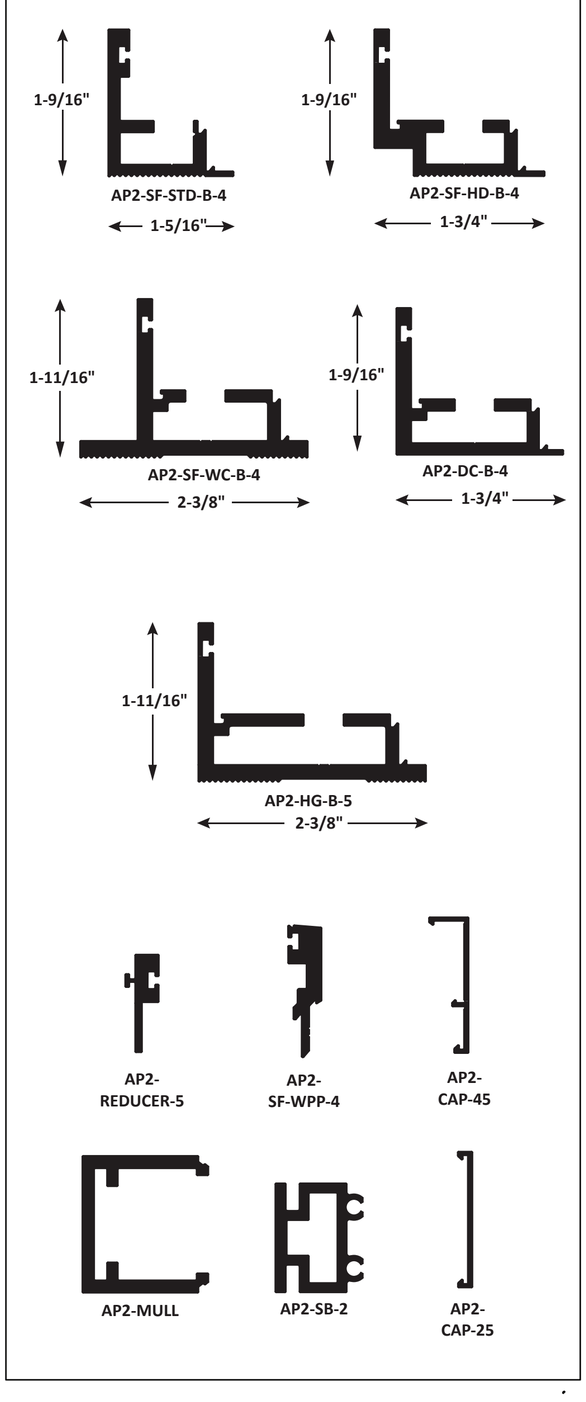

AP2-SF-HD-AP375

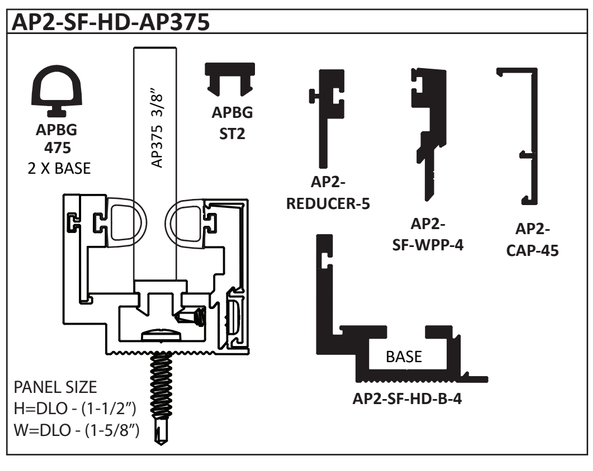

AP2-SF-HD-AP75

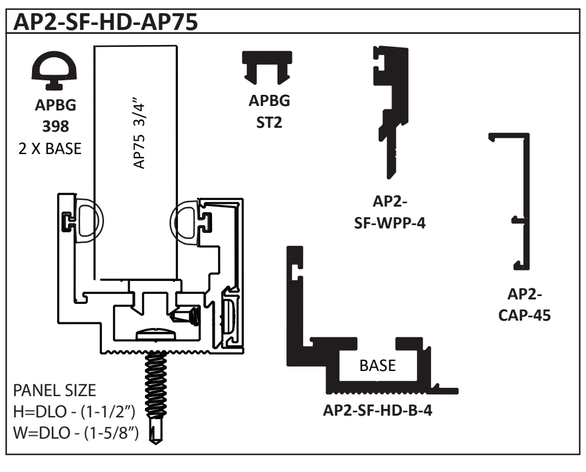

AP2-SF-HD-AP100 / AP2-SF-HD-AP375-IG-1"

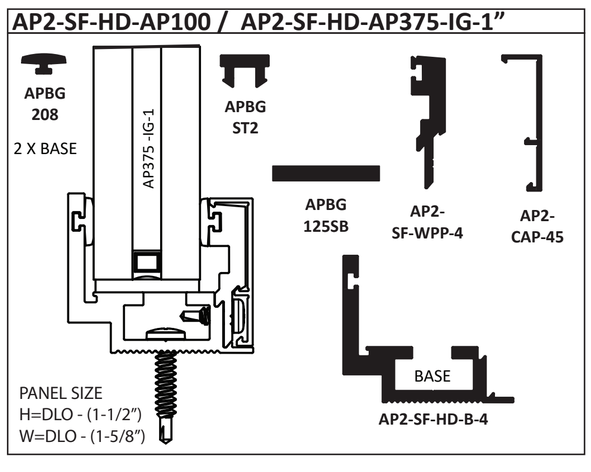

AP2-SF-HG-RTG4 1-1/8"

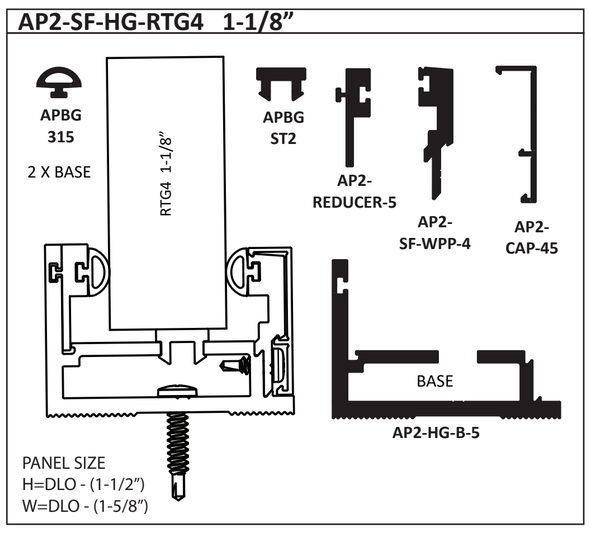

AP2-SF-HG-RG4LS 1-1/4"

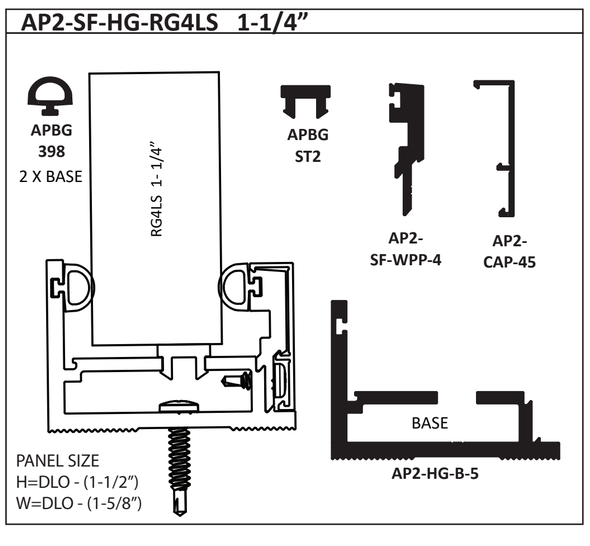

AP2-SF-HG-RTG5 1-3/8"

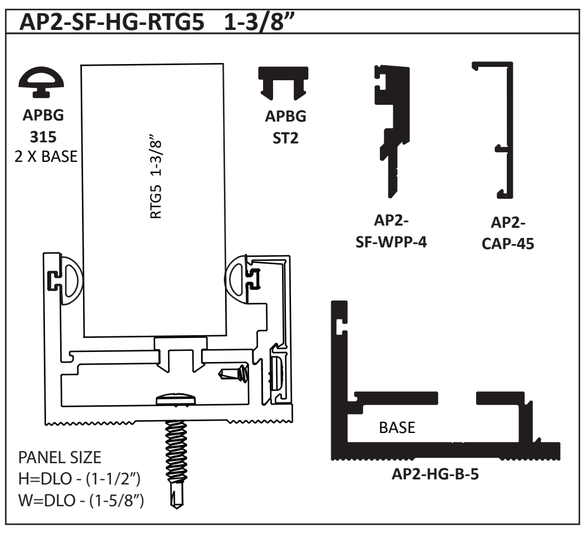

AP2-SF-WC-AP375

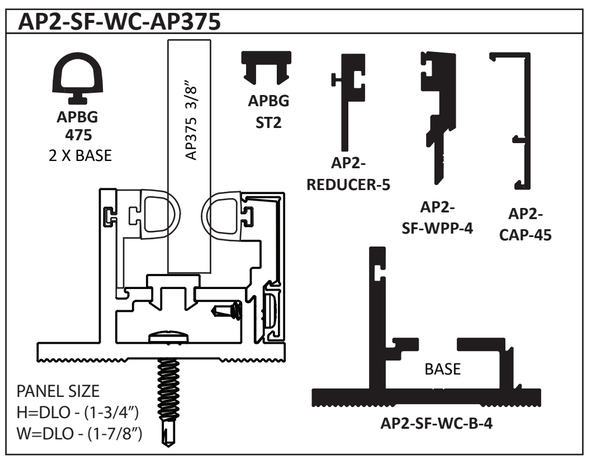

AP2-SF-WC-AP75

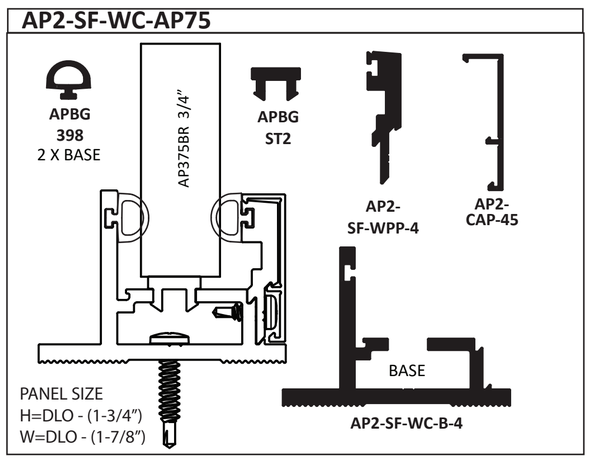

AP2-SF-WC-AP100

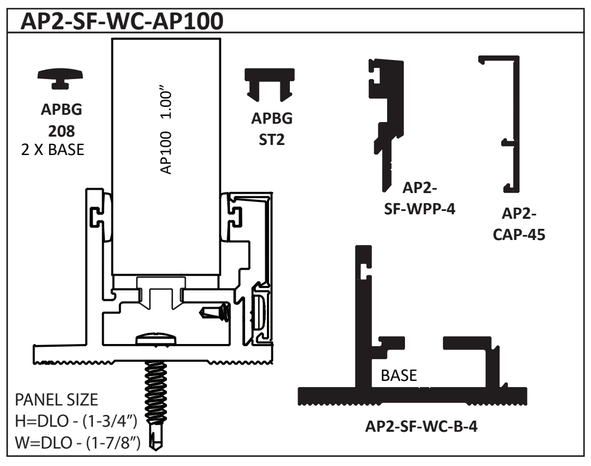

AP2-SF-WC-AP375-IG-1"

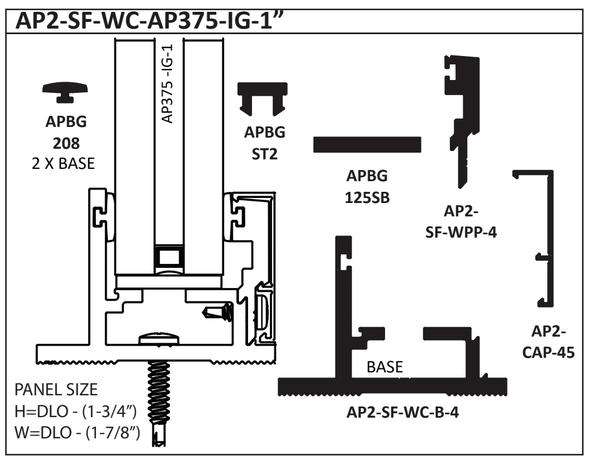

AP2-DC-AP375

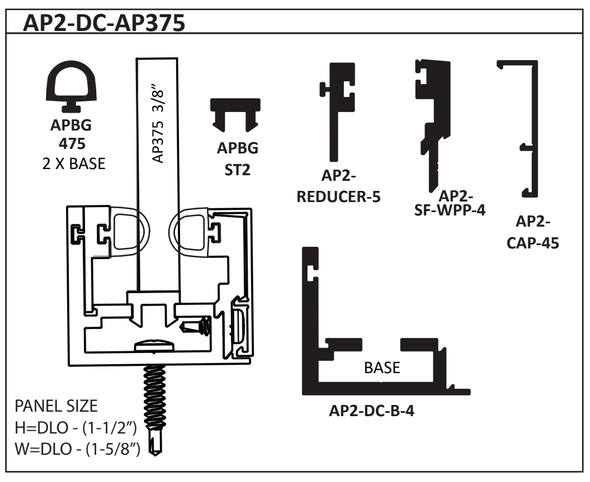

AP2-DC-AP75

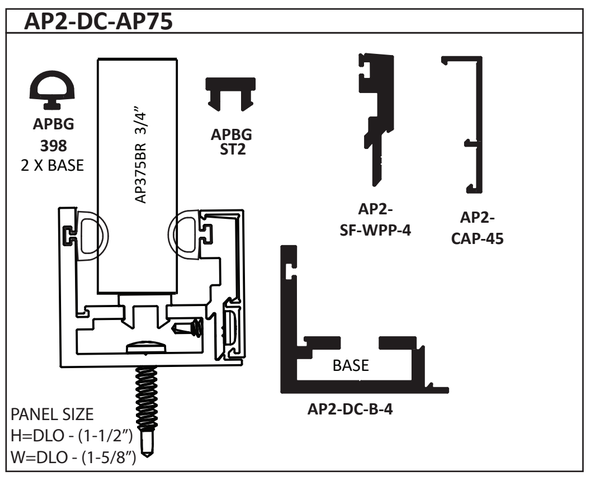

AP2-DC-AP100

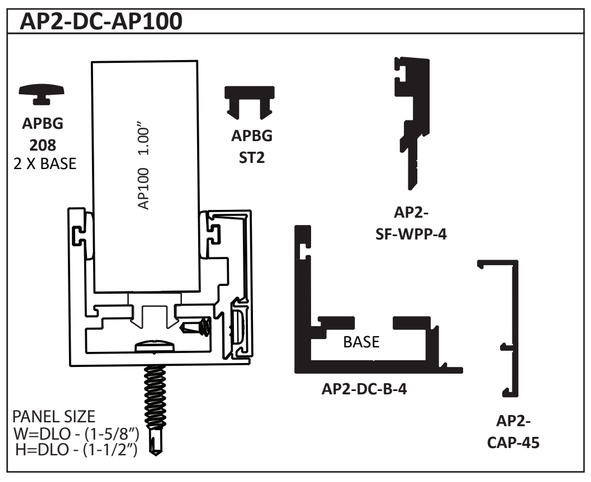

AP2-DC-AP375-IG-1"

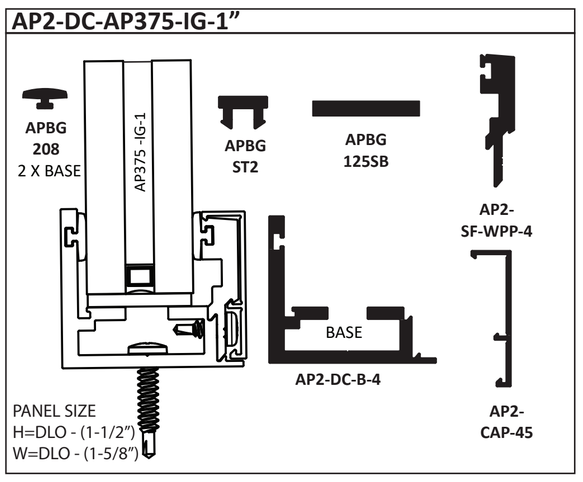

AP2-SB-2 SHEAR BLOCK

CUT TO 1" LENGTHS
PACK IN BAGS OF 10 SHEAR BLOCKS
AND 20 FASTENERS.

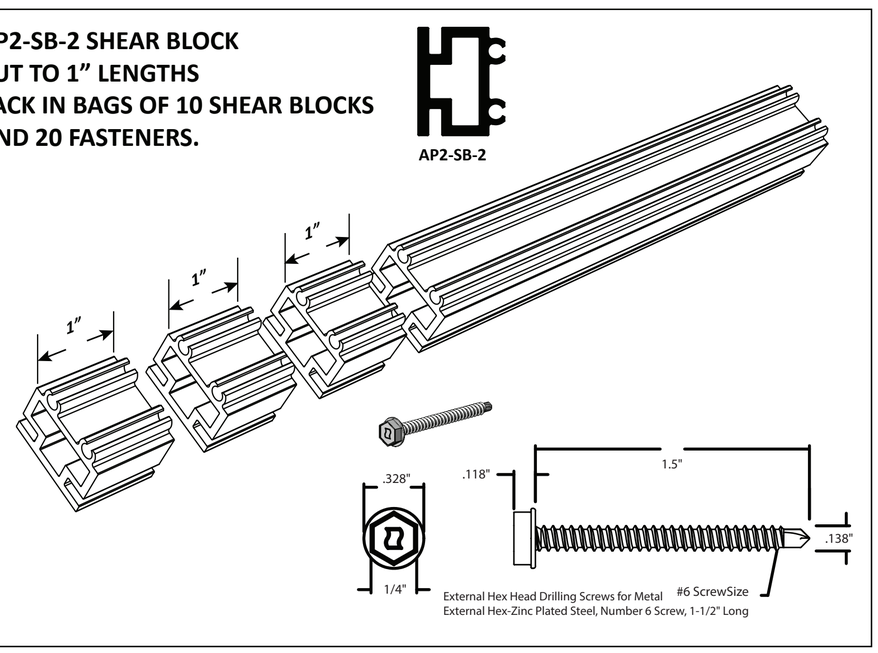

AP2-834-TPFAST

#8 x 3/4"
TAMPER-PROOF SELF-DRILLING FASTENER.
ZINCPLATED AND 18-8 ACCEPTABLE.
INCLUDE WITH ORDERS.

2 X BASE

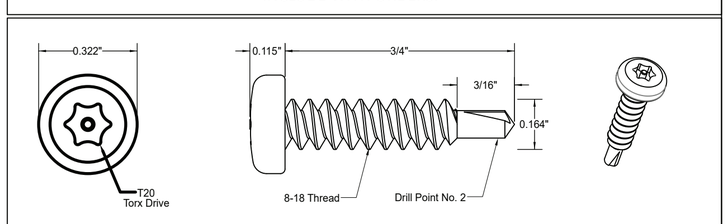

SHIPPING RATIO

(4) FASTENERS PER FT OF AP2-AF-WPP-4

AP2-SF-WPP-4

AP2-1010-FAST

#10 x 1.0"
PHILLIPS -HEAD DRILLING FASTENER.
ZINCPLATED AND 18-8 ACCEPTABLE.
INCLUDE WITH ORDERS.

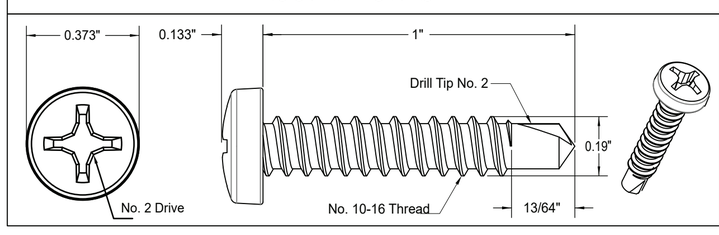

SHIPPING RATIO

(4) FASTENERS PER FT OF BASE

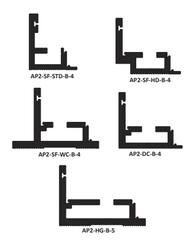

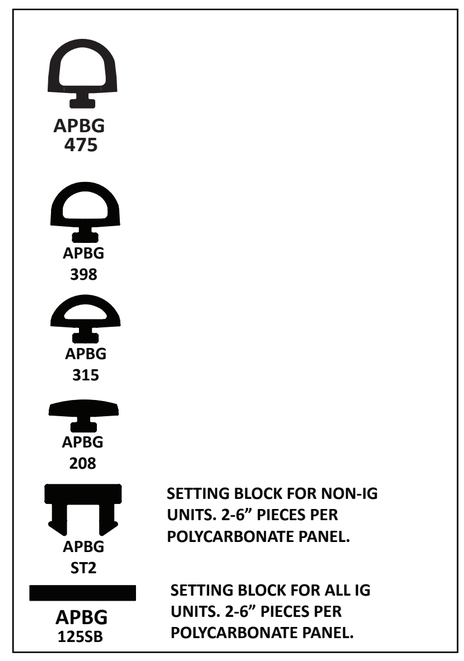

SETTING BLOCK FOR NON-IG UNITS. 2-6" PIECES PER POLYCARBONATE PANEL.

SETTING BLOCK FOR ALL IG UNITS. 2-6" PIECES PER POLYCARBONATE PANEL.

RIOT GLASS, INC.
17941 BROOKSHIRE LANE
HUNTINGTON BEACH, CA 92647
800-580-2303 www.riotglass.com

Patent Pending
#17525645 #17525545

www.riotglass.com

RIOT GLASS

DCN070623-1

© COPYRIGHT RIOTGLASS 2023